TACOSETTER BYPASS - SEALING CAP SET

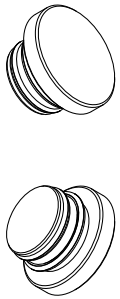

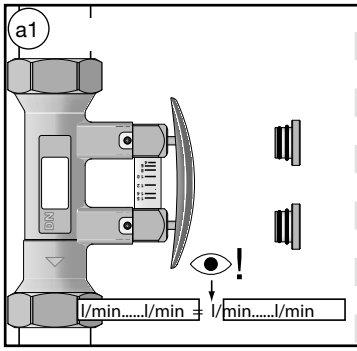

TacoSetter Bypass	DN	l/min		
223.2382.000	20	2 ... 12	→	296.2340.003
223.2383.000	20	8 ... 30	→	296.2340.003
223.2480.000	25	10 ... 40	→	296.2340.003
223.2580.000	32	20 ... 70	→	296.2340.003

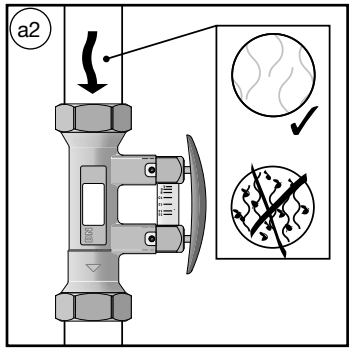

1x

2x

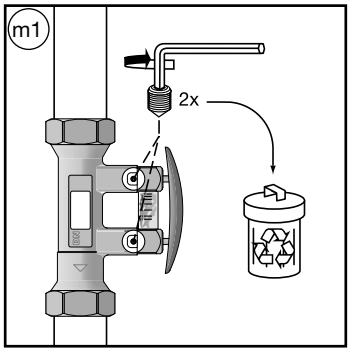

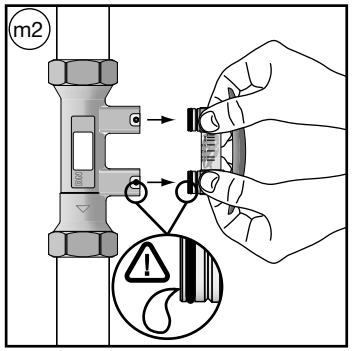

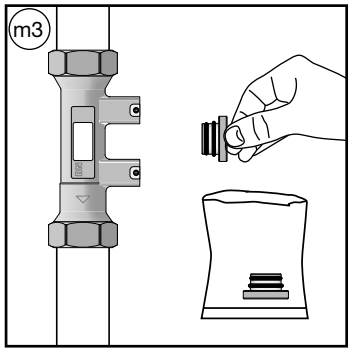

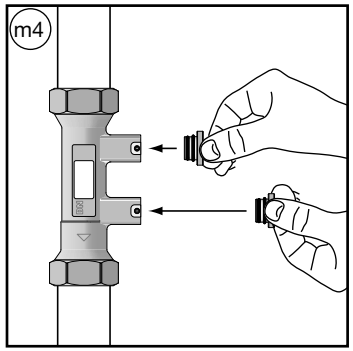

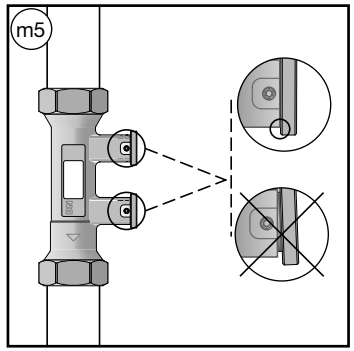

A

TB	185°C
PB	10 bar

B
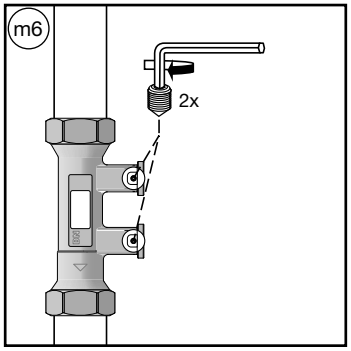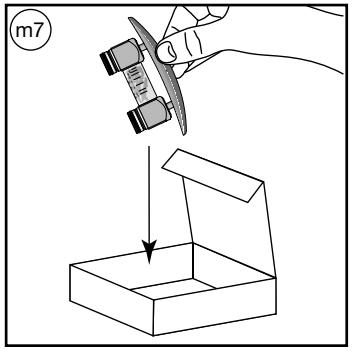
TB	130°C
PB	8 bar